Project:

Location:

Fixture Type:

Catalog Number:

AVAILABLE FINISHES:

Avant Garde

PD-W17907

PRODUCT DESCRIPTION

Classic lantern profile artfully expressed in black lines. A clear mouth-blown glass element within reveals a spectral reference to an Edison filament lamp of old. A contemporary artpiece ideal for welcoming friends and family in entryways and lobbies in residential and hospitality venues.

FEATURES

- ACLED driverless technology
- Reeded etched glass

SPECIFICATIONS

Rated Life	54000 Hours
Standards	ETL, cETL,Wet Location Listed,2019Compliant
Input	120 VAC,50/60Hz
Dimming	ELV: 100-10%,TRIAC: 100-5%
Color Temp	3000K
CRI	90
Construction	Aluminum hardware, etched fluted glass

REPLACEMENT PARTS

RPL-GLA-17907-02 - Clear Glass
RPL-ROD-OUT06A-BK - 6" Rod
RPL-GLA-17907-01 - Extruded Glass
RPL-ROD-OUT12A-BK - 12" Rod

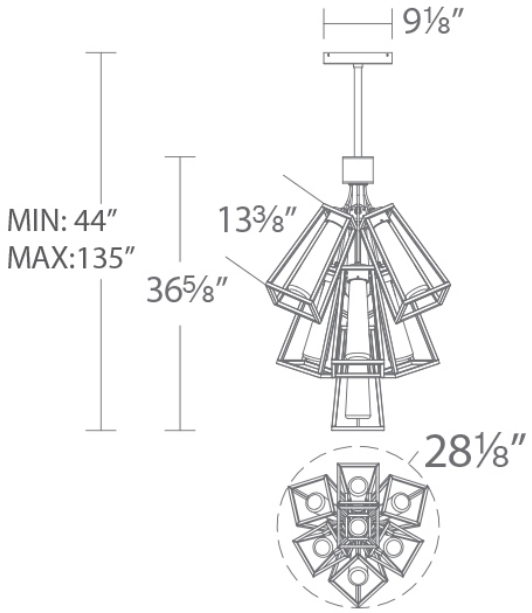

PD-W17907

Model & Size	Color Temp & CRI	Watt	Lumens	Finish
❍ PD-W17907 37" - 7 lights	❍ 3000K 90	40.8W	1182	❍ BK Black

Example: **PD-W17907-BK**

For custom requests please contact customs@modernforms.com

Project:

Location:

Fixture Type:

Catalog Number:

AVAILABLE FINISHES:

Avant Garde

PD-W17913

PRODUCT DESCRIPTION

Classic lantern profile artfully expressed in black lines. A clear mouth-blown glass element within reveals a spectral reference to an Edison filament lamp of old. A contemporary artpiece ideal for welcoming friends and family in entryways and lobbies in residential and hospitality venues.

FEATURES

- ACLED driverless technology
- Reeded etched glass
- NEC CODE (314.24) requires ceiling outlet boxes in the U.S. support up to 50 lbs.
- This fixture in the 13 light format exceeds 50 lbs. and must be installed using a U.L. listed outlet box approved for up to 100 lbs. or supported independently of the outlet box

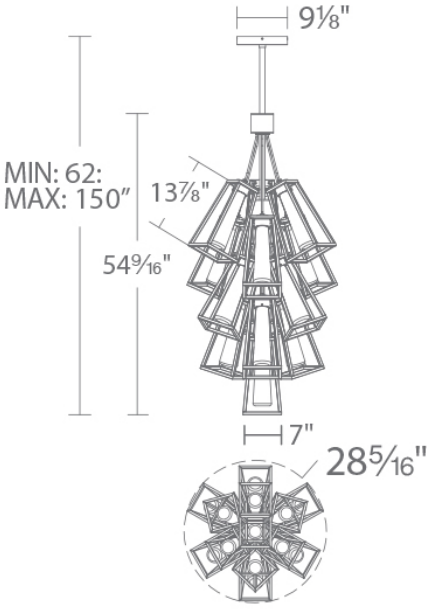

PD-W17913

SPECIFICATIONS

Rated Life	54000 Hours
Standards	ETL, cETL,Wet Location Listed,2019Compliant
Input	120 VAC,50/60Hz
Dimming	ELV: 100-10%,TRIAC: 100-5%
Color Temp	3000K
CRI	90
Construction	Aluminum hardware, etched fluted glass

REPLACEMENT PARTS

RPL-GLA-17907-02 - Clear Glass
RPL-ROD-OUT06A-BK - 6" Rod
RPL-GLA-17907-01 - Extruded Glass
RPL-ROD-OUT12A-BK - 12" Rod

Model & Size	Color Temp & CRI	Watt	Lumens	Finish
❍ PD-W17913 55" - 13 lights	❍ 3000K 90	77.6W	2195	❍ BK Black

Example: **PD-W17913-BK**

For custom requests please contact customs@modernforms.com